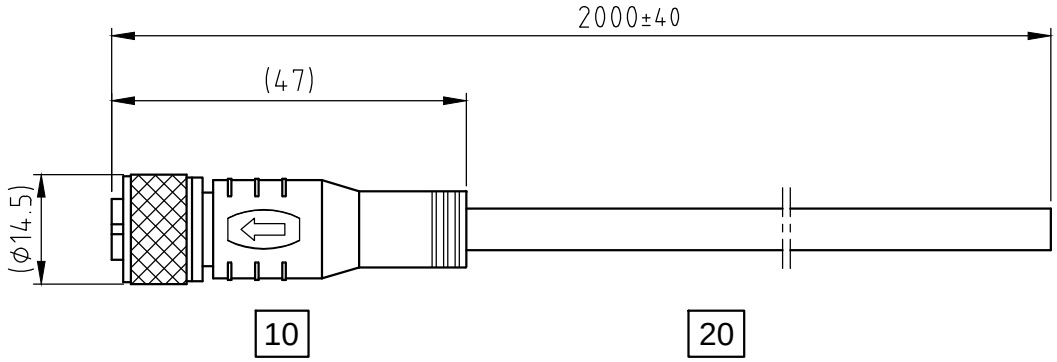

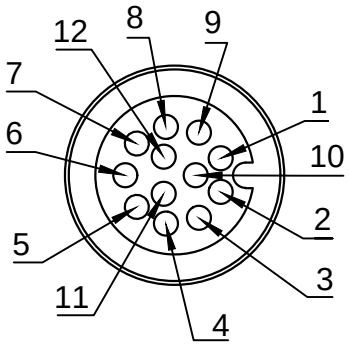

10	CONNECTOR A
M12 / 12-Pole / A-Coding / female / straight	
Contact Resistance mΩ	≤5
Contact Material	Brass, Gold-Plated
Contact Carrier Material	PA
Connector Body Material	TPU
Coupling (Nut / Screw)	Brass, Nickel-Plated
O-Ring Material	FKM
Protection Class	IP67 (locked Condition)
Pin No.	**Color**
1	WH
2	BN
3	GN
4	YE
5	GY
6	PK
7	BU
8	RD
9	OG
10	dark reddish purple
11	BK
12	VT
Coupling	Braid

20	CABLE SPECIFICATION	
Cable Length	mm	2000
Cable Diameter	mm	6.0
Cable Material		PUR
Cable Color		Black
Conductor Insulation		PVC
Conductor / Cross - Section		12x AWG26
UL Type		UL 20549
Shielded		Yes
Bending Radius (flexible)		Min. 15 x Ø
Bending Radius (stationary)		Min. 12 x Ø

GENERAL SPECIFICATION		
Rated Current	A	1.5
Rated Voltage	VAC/DC	30
Insulation resistance	MΩ	≥100
Ambient temperature		-10°C...+80°C

ISO 8015	ISO 1302	ISO 2768 cK	ISO 13715	Weight: 0.12 kg

	Date	Name
Drawn	07.11.2018	Schneid_A
Checked	04.12.2018	Reith_S
Approved	----	----

REV	Rev. Text	Name	Rel. Date

Nanotec® PLUG & DRIVE

ZK-M12-12-2M-1-AFF

14200239

-

A4-Q

State: Sample | Rev: -.B | P