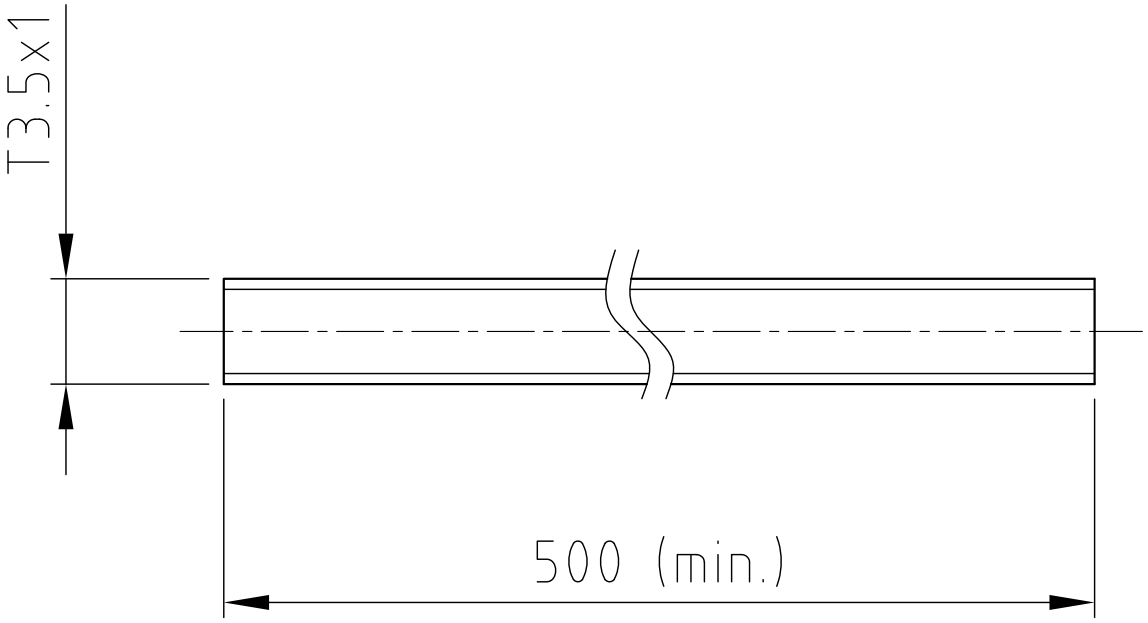

1 2

Major diameter	[mm]	3.5 0/-0.15
Minor diameter	[mm]	2.3

				Surface specification DIN ISO 1302	General tolerances DIN ISO 2768- mK	Work piece edge DIN ISO 13715	Scale: 2:1	
							Material: 1.4404	
				Nanotec® PLUG & DRIVE		Name	Date	THREADED SPINDLE
2	revise chart	21.06.17	A.S.		DRN	J.D.	21.03.2014	
1	revise drawing	08.06.17	A.S.		CHKD	G.S.	21.03.2014	ZST3,5-1-500
REV	DESCRIPTION	DATE	DRN					