Front view and mounting

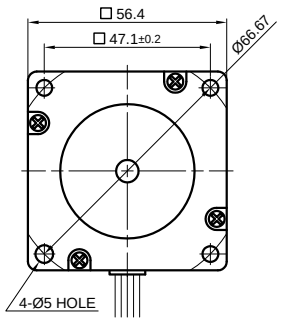

Side view

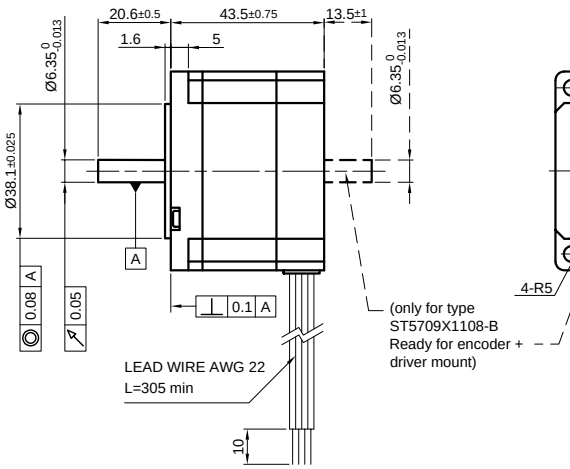

Rear view

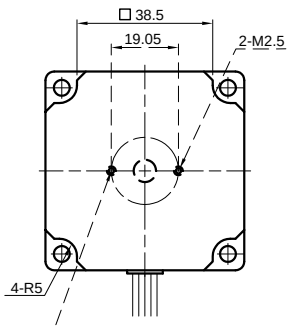

SPECIFICATION \ CONNECTION	UNIPOLAR OR BIPOLAR-1 WINDING	BIPOLAR SERIAL	BIPOLAR PARALLEL
VOLTAGE (VDC)	4.4		
AMPS/PHASE	1.1	0.78	1.56
RESISTANCE/PHASE (Ohms)@25°C	4.0±15%	8.0±15%	2.0±15%
INDUCTANCE/PHASE (mH) @1KHz	5.0±20%	20±20%	5.0±20%
HOLDING TORQUE (Nm) [lb-in]	0.43 [3.806]	0.608 [5.381]	0.608 [5.381]
DETENT TORQUE (Nm) [lb-in]	0.0129 [0.114]		
STEP ANGLE (°)	0.9		
STEP ACCURACY (NON-ACCUM)	±5%		
ROTOR INERTIA (Kg-m^2) [lb-in^2]	1.2x10^{-5} [0.041]		
WEIGHT (Kg) [lb]	0.45 [0.992]		

TEMPERATURE RISE: MAX.80°C (MOTOR STANDSTILL; FOR 2 PHASE ENERGIZED)

AMBIENT TEMPERATURE -10°~ 50°C [14°F ~ 122°F]

INSULATION RESISTANCE 100 MOhm (UNDER NORMAL TEMPERATURE AND HUMIDITY)

INSULATION CLASS B 130° [266°F]

DIELECTRIC STRENGTH 500VAC FOR 1 MIN. (BETWEEN THE MOTOR COILS AND THE MOTOR CASE)

AMBIENT HUMIDITY MAX. 85% (NO CONDENSATION)

PERMISSIBLE RADIAL+AXIAL FORCE

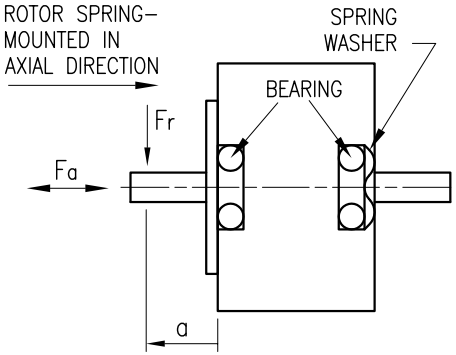

AXIAL-FORCE Fa (N)	Fa=10			
DISTANCE a (mm)	5	10	15	20
RADIAL-FORCE Fr (N)	130	90	70	52

	AXIAL	RADIAL
SHAFT PLAY (mm)	0.075	0.025
AT LOAD MAX: (N)	10	5.0

TYPE OF CONNECTION (EXTERN)				MOTOR	
UNIPOLAR	BIPOLAR 1WINDING	BIPOLAR SERIAL	BIPOLAR PARALLEL	LEADS	WINDING
A	A	A	A	RED	A
COM				RED/WHT	
A\		A\	A\	BLK/WHT	
B	B	B	B	BLK	A\
COM				GRN	B
B\		B\	B\	GRN/WHT	
				YEL/WHT	
				YEL	B\

FULL STEP 2 PHASE-Ex.,
WHEN FACING MOUNTING END (X)

STEP	A	B	A\	B\		CCW
1	+	+	−	−	↓	↑
2	−	+	+	−		
3	−	−	+	+		
4	+	−	−	+	CW	

WIRING DIAGRAM

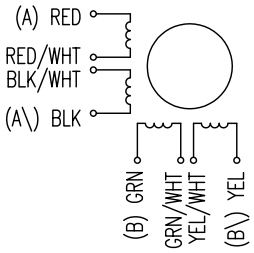

REV	DESCRIPTION	DATE	APVD

NANOTEC:

ST5709X1108

SCALE FREE	
X	±0.5
1PL	±0.2
2PL	±0.1
ANGLE	±30'

APVD	S.Ha.	15.01.07
CHKD		
DRN	J.W.	05.07.06
SIGNATURE		DATE

STEPPING MOTOR

DWG.NO

ST5709X1108